PVT PVS

Home Civil Industry Fire

# PVT/PVS

## S.S.304 vertical multistage pump
## Bomba de etapas múltiples inox304
## *Pompe multicellulaire verticale inox304*

## NEW/*NUEVO/NOUVEAU*

### DESCRIPTION/*DESCRIPCIONES/DESCRIPTION*

- SS304 vertical, multistage centrifugal pump
- The suction and discharge ports on the same level
- PVT pump head and base are in cast iron
- PVT pump impeller and shaft are in stainless steel
- PVS pump all wetted parts are in stainless steel
- YE3 high efficient motor, with protection IP55 class F
- Quality bearing, wear resistance mechanical seal
- Liquid temperature between -10°C and +120°C

- *Inox 304 bomba centrífuga vertical de etapas múltiples*
- *Los puertos de succión y descarga en el mismo nivel*
- *El cabezal y la base de la bomba PVT son de hierro fundido*
- *El impulsor y el eje de la bomba PVT son de acero inoxidable*
- *PVS todas las partes húmedas son de acero inoxidable*
- *Motor de alta eficiencia YE3, con protección IP55 clase F*
- *Rodamiento de marca NSK y cierre mecánico personalizado*
- *Temperatura del líquido entre -10 °C y + 120 °C*

- *Pompe centrifuge multicellulaire verticale inox 304*
- *Les orifices d'aspiration et de refoulement au même niveau*
- *La tête et la base de la pompe PVT sont en fonte.*
- *Roue et arbre de pompe PVT en acier inoxydable*
- *PVS toutes les pièces en contact avec le fluide sont en inox*
- *Moteur haute efficacité YE3, avec protection IP55 classe F*
- *Roulement NSK qualité, joint mécanique résistance à l'usure*
- *Température du liquide entre -10°C et + 120°C*

### APPLICATIONS/*APLICACIONES/APPLICATIONS*

The stainless steel multistage pumps are suitable for industrial processing systems,washing and cleaning systems,pumping of acids and alkalis, filtration systems,water pressure boosting,water Treatment,HVAC,irrigation, fire protection systems etc.

*Las bombas multietapa de acero inoxidable son adecuadas para sistemas de procesamiento industrial, sistemas de lavado y limpieza, bombeo de ácidos y álcalis, sistemas de filtración, aumento de la presión del agua, HVAC, riego, sistemas de protección contra incendios, etc.*

*Les pompes à plusieurs étages en acier inoxydable conviennent systèmes de traitement industriel, systèmes de lavage et de nettoyage, pompage des acides et des alcalis, systèmes de filtration, à la surpression, traitement de l'eau,CVC, à l'irrigation, systèmes de protection contre les incendies, etc.*

### MODEL CODE/*CÓDIGO MODELO/CODE MODÈLE*

For example/*Por ejemplo/Par exemple*

**PVT(S) 32 - 30 - 2**

- **2**=Small impeller number
  *Número de impulsor pequeño*
  *Numéro de roue petit*
- **30**=Stage/*Etapa/Étape* x10 (PVT32-PVT90)
  Stage/*Etapa/Étape* x1 (PVT1-PVT20)
- **32**=Rated flow($m^3$/h)
  *Caudal nominal ($m^3$/ h)*
  *Débit nominal($m^3$/ h)*
- **PVT**=Common type vertical multistage pump
  *Tipo común bomba vertical de etapas múltiples*
  *Pompe multicellulaire verticale de type commun*
- **PVS**=Pump with flow passage components in SS304
  *Bomba con componentes de paso de flujo en inox304*
  *Pompe avec composants de passage d'écoulement en inox304*





### TECHNICAL DATA/*DATOS TÉCNICOS/DONNÉES TECHNIQUES*

50 Hz n=2900 1/min

| MODEL *MODELO MODÈLE* | DN mm | Power *Potencia Puissance* kw | hp | Q=DELIVERY/*CAUDAL/DÉBIT* us gpm | l/min | m³/h | 1.8 | 2.6 | 3.5 | 4.4 | 5.3 | 6.2 | 7 | 7.9 | 8.8 | 10.6 | 12.3 | 13.2 | 14.1 | 15.4 | 15.9 | 17.6 |
|---|---|---|---|---|---|---|---|---|---|---|---|---|---|---|---|---|---|---|---|---|---|---|
| | | | | | | | 7 | 10 | 13 | 17 | 20 | 23 | 27 | 30 | 33 | 40 | 47 | 50 | 53 | 58 | 60 | 67 |
| | | | | | | | 0.4 | 0.6 | 0.8 | 1 | 1.2 | 1.4 | 1.6 | 1.8 | 2 | 2.4 | 2.8 | 3 | 3.2 | 3.5 | 3.6 | 4 |
| | | | | H=Head/*Altura/Hauteur*(*m*) | | | | | | | | | | | | | | | | | | |
| **PVT 1-2** | 25x25 | 0.37 | 0.5 | 13 | 12.5 | 12 | 11.5 | 11 | 10.5 | 10 | 9.5 | 9 | - | - | - | - | - | - | - | - | - |
| **PVT 1-3** | 25x25 | 0.37 | 0.5 | 19 | 18 | 17.5 | 17 | 16.5 | 16 | 15 | 14 | 12 | - | - | - | - | - | - | - | - | - |
| **PVT 1-4** | 25x25 | 0.37 | 0.5 | 24 | 23.5 | 23 | 22.5 | 21.5 | 21 | 19 | 18 | 16 | - | - | - | - | - | - | - | - | - |
| **PVT 1-5** | 25x25 | 0.37 | 0.5 | 30 | 29.6 | 29 | 28 | 27 | 26 | 24 | 22 | 20 | - | - | - | - | - | - | - | - | - |
| **PVT 1-6** | 25x25 | 0.37 | 0.5 | 36 | 35.5 | 35 | 33.5 | 33 | 31 | 28 | 26 | 23 | - | - | - | - | - | - | - | - | - |
| **PVT 1-7** | 25x25 | 0.37 | 0.5 | 42 | 41 | 40.5 | 39 | 38 | 36 | 33 | 30 | 27 | - | - | - | - | - | - | - | - | - |
| **PVT 1-8** | 25x25 | 0.55 | 0.75 | 48 | 47 | 46 | 45 | 43 | 41 | 38 | 34 | 30 | - | - | - | - | - | - | - | - | - |
| **PVT 1-9** | 25x25 | 0.55 | 0.75 | 54 | 53 | 52 | 51 | 49 | 46 | 43 | 39 | 33 | - | - | - | - | - | - | - | - | - |
| **PVT 1-10** | 25x25 | 0.55 | 0.75 | 60 | 59 | 58 | 57 | 54 | 51 | 48 | 43 | 36 | - | - | - | - | - | - | - | - | - |
| **PVT 1-11** | 25x25 | 0.55 | 0.75 | 66 | 65 | 63 | 61 | 59 | 56 | 52 | 47 | 40 | - | - | - | - | - | - | - | - | - |
| **PVT 1-12** | 25x25 | 0.75 | 1 | 72 | 71 | 69 | 67 | 64 | 61 | 57 | 51 | 44 | - | - | - | - | - | - | - | - | - |
| **PVT 1-13** | 25x25 | 0.75 | 1 | 78 | 77 | 75 | 73 | 69 | 66 | 62 | 55 | 47 | - | - | - | - | - | - | - | - | - |
| **PVT 1-15** | 25x25 | 0.75 | 1 | 89 | 88 | 86 | 84 | 79 | 76 | 71 | 63 | 55 | - | - | - | - | - | - | - | - | - |
| **PVT 1-17** | 25x25 | 1.1 | 1.5 | 101 | 99 | 97 | 95 | 89 | 86 | 80 | 71 | 62 | - | - | - | - | - | - | - | - | - |
| **PVT 1-19** | 25x25 | 1.1 | 1.5 | 113 | 110 | 108 | 106 | 99 | 96 | 89 | 79 | 69 | - | - | - | - | - | - | - | - | - |
| **PVT 1-21** | 25x25 | 1.1 | 1.5 | 124 | 122 | 120 | 117 | 110 | 106 | 98 | 87 | 75 | - | - | - | - | - | - | - | - | - |
| **PVT 1-23** | 25x25 | 1.1 | 1.5 | 137 | 133 | 131 | 128 | 121 | 116 | 107 | 96 | 82 | - | - | - | - | - | - | - | - | - |
| **PVT 1-25** | 25x25 | 1.5 | 2 | 149 | 145 | 143 | 139 | 131 | 126 | 116 | 104 | 89 | - | - | - | - | - | - | - | - | - |
| **PVT 1-27** | 25x25 | 1.5 | 2 | 161 | 157 | 155 | 150 | 141 | 136 | 125 | 112 | 95 | - | - | - | - | - | - | - | - | - |
| **PVT 1-30** | 25x25 | 1.5 | 2 | 178 | 175 | 171 | 166 | 157 | 150 | 139 | 124 | 106 | - | - | - | - | - | - | - | - | - |
| **PVT 1-33** | 25x25 | 2.2 | 3 | 196 | 192 | 188 | 183 | 173 | 165 | 154 | 137 | 118 | - | - | - | - | - | - | - | - | - |
| **PVT 1-36** | 25x25 | 2.2 | 3 | 214 | 210 | 205 | 200 | 190 | 181 | 169 | 151 | 130 | - | - | - | - | - | - | - | - | - |
| **PVT 2-2** | 25x25 | 0.37 | 0.5 | - | - | - | 18 | 17 | 17 | 16 | 16 | 15 | 13 | 12 | 11 | 10 | 8 | - | - |
| **PVT 2-3** | 25x25 | 0.37 | 0.5 | - | - | - | 27 | 26 | 25 | 24 | 23 | 22 | 20 | 18 | 17 | 15 | 12 | - | - |
| **PVT 2-4** | 25x25 | 0.55 | 0.75 | - | - | - | 36 | 35 | 34 | 33 | 32 | 30 | 26 | 24 | 22 | 20 | 16 | - | - |
| **PVT 2-5** | 25x25 | 0.55 | 0.75 | - | - | - | 45 | 43 | 42 | 40 | 39 | 37 | 33 | 30 | 27 | 24 | 20 | - | - |
| **PVT 2-6** | 25x25 | 0.75 | 1 | - | - | - | 53 | 52 | 51 | 50 | 48 | 45 | 40 | 36 | 33 | 30 | 24 | - | - |
| **PVT 2-7** | 25x25 | 0.75 | 1 | - | - | - | 63 | 61 | 59 | 57 | 55 | 52 | 47 | 41 | 38 | 35 | 28 | - | - |
| **PVT 2-9** | 25x25 | 1.1 | 1.5 | - | - | - | 80 | 78 | 76 | 73 | 70 | 67 | 61 | 54 | 50 | 45 | 37 | - | - |
| **PVT 2-11** | 25x25 | 1.1 | 1.5 | - | - | - | 98 | 95 | 92 | 89 | 86 | 82 | 73 | 64 | 59 | 54 | 44 | - | - |
| **PVT 2-13** | 25x25 | 1.5 | 2 | - | - | - | 116 | 114 | 110 | 106 | 102 | 98 | 89 | 78 | 72 | 65 | 52 | - | - |
| **PVT 2-15** | 25x25 | 1.5 | 2 | - | - | - | 134 | 130 | 127 | 123 | 118 | 112 | 100 | 90 | 82 | 73 | 60 | - | - |
| **PVT 2-18** | 25x25 | 2.2 | 3 | - | - | - | 161 | 157 | 153 | 148 | 142 | 136 | 121 | 108 | 100 | 91 | 76 | - | - |
| **PVT 2-22** | 25x25 | 2.2 | 3 | - | - | - | 197 | 192 | 186 | 180 | 173 | 165 | 148 | 130 | 120 | 110 | 90 | - | - |
| **PVT 2-26** | 25x25 | 3 | 4 | - | - | - | 232 | 228 | 221 | 214 | 206 | 198 | 179 | 158 | 144 | 130 | 110 | - | - |
| **PVT 3-2** | 25x25 | 0.37 | 0.5 | - | - | - | - | 12.5 | 12 | 11.5 | 11 | 11 | 10.5 | 10 | 9 | 8 | 7 | 7 | 6 |
| **PVT 3-3** | 25x25 | 0.37 | 0.5 | - | - | - | - | 19 | 19 | 18.5 | 18 | 17.5 | 16.5 | 15 | 14 | 13 | 12 | 11 | 9 |
| **PVT 3-4** | 25x25 | 0.37 | 0.5 | - | - | - | - | 25 | 25 | 24 | 24 | 23 | 21.5 | 20 | 19 | 18 | 16 | 15 | 12 |
| **PVT 3-5** | 25x25 | 0.37 | 0.5 | - | - | - | - | 31 | 31 | 30 | 30 | 29 | 27 | 25 | 23 | 22 | 20 | 19 | 16 |
| **PVT 3-6** | 25x25 | 0.55 | 0.75 | - | - | - | - | 36 | 36 | 35 | 35 | 34 | 32 | 30 | 28 | 27 | 24 | 23 | 19 |
| **PVT 3-7** | 25x25 | 0.55 | 0.75 | - | - | - | - | 43 | 42 | 41 | 40 | 39 | 37 | 34 | 32 | 31 | 28 | 27 | 22 |
| **PVT 3-8** | 25x25 | 0.75 | 1 | - | - | - | - | 49 | 48 | 47 | 46 | 45 | 43 | 39 | 37 | 35 | 32 | 31 | 25 |
| **PVT 3-9** | 25x25 | 0.75 | 1 | - | - | - | - | 55 | 54 | 53 | 52 | 51 | 48 | 45 | 42 | 40 | 36 | 35 | 28 |
| **PVT 3-10** | 25x25 | 0.75 | 1 | - | - | - | - | 61 | 60 | 59 | 58 | 57 | 54 | 50 | 47 | 45 | 41 | 39 | 31 |
| **PVT 3-11** | 25x25 | 1.1 | 1.5 | - | - | - | - | 67 | 66 | 64 | 63 | 61 | 58 | 54 | 51 | 49 | 44 | 42 | 34 |
| **PVT 3-12** | 25x25 | 1.1 | 1.5 | - | - | - | - | 73 | 72 | 70 | 69 | 67 | 63 | 58 | 55 | 52 | 47 | 45 | 37 |
| **PVT 3-13** | 25x25 | 1.1 | 1.5 | - | - | - | - | 78 | 77 | 76 | 75 | 73 | 69 | 64 | 60 | 57 | 51 | 49 | 40 |
| **PVT 3-15** | 25x25 | 1.1 | 1.5 | - | - | - | - | 90 | 89 | 88 | 86 | 84 | 79 | 73 | 69 | 66 | 59 | 57 | 46 |
| **PVT 3-17** | 25x25 | 1.5 | 2 | - | - | - | - | 103 | 102 | 100 | 98 | 96 | 90 | 83 | 79 | 75 | 67 | 64 | 52 |
| **PVT 3-19** | 25x25 | 1.5 | 2 | - | - | - | - | 115 | 114 | 112 | 110 | 107 | 100 | 92 | 88 | 83 | 75 | 72 | 58 |
| **PVT 3-21** | 25x25 | 2.2 | 3 | - | - | - | - | 128 | 126 | 124 | 122 | 119 | 112 | 102 | 98 | 91 | 82 | 79 | 64 |
| **PVT 3-23** | 25x25 | 2.2 | 3 | - | - | - | - | 140 | 138 | 135 | 133 | 130 | 122 | 112 | 107 | 100 | 90 | 86 | 70 |
| **PVT 3-25** | 25x25 | 2.2 | 3 | - | - | - | - | 151 | 149 | 147 | 144 | 141 | 131 | 122 | 116 | 109 | 98 | 94 | 76 |
| **PVT 3-27** | 25x25 | 2.2 | 3 | - | - | - | - | 164 | 162 | 159 | 156 | 152 | 143 | 132 | 124 | 117 | 105 | 101 | 82 |
| **PVT 3-29** | 25x25 | 2.2 | 3 | - | - | - | - | 175 | 173 | 170 | 167 | 163 | 153 | 142 | 133 | 126 | 113 | 109 | 88 |
| **PVT 3-31** | 25x25 | 3 | 4 | - | - | - | - | 187 | 185 | 182 | 179 | 175 | 165 | 153 | 142 | 135 | 121 | 116 | 94 |
| **PVT 3-33** | 25x25 | 3 | 4 | - | - | - | - | 199 | 197 | 194 | 191 | 187 | 176 | 163 | 151 | 145 | 130 | 125 | 100 |
| **PVT 3-36** | 25x25 | 3 | 4 | - | - | - | - | 218 | 215 | 212 | 208 | 204 | 192 | 178 | 168 | 159 | 143 | 137 | 109 |

**PVS also available**/*también disponible/aussi disponible*

**Performance curve in page**/*Curva en página/Courbe en page* 179-181

## TECHNICAL DATA/*DATOS TÉCNICOS/DONNÉES TECHNIQUES*

**50 Hz** **n=2900 1/min**

| MODEL *MODELO MODÈLE* | DN | Power *Potencia Puissance* | | Q=DELIVERY/*CAUDAL/DÉBIT* | | | | | | | | | | | | | | | |
|---|---|---|---|---|---|---|---|---|---|---|---|---|---|---|---|---|---|---|---|
| | | | | us gpm | 6.6 | 8.8 | 13.2 | 17.6 | 22 | 26.4 | 30.8 | 35.2 | 39.6 | 44.1 | 48.5 | 52.9 | 57.3 | 61.7 | 66.1 | 70.5 |
| | | | | l/min | 25 | 33 | 50 | 67 | 83 | 100 | 117 | 133 | 150 | 167 | 183 | 200 | 217 | 233 | 250 | 267 |
| | | | | m³/h | 1.5 | 2 | 3 | 4 | 5 | 6 | 7 | 8 | 9 | 10 | 11 | 12 | 13 | 14 | 15 | 16 |
| | mm | kw | hp | H=Head/*Altura/Hauteur*(*m*) | | | | | | | | | | | | | | | | |
| **PVT 4-2** | 32x32 | 0.37 | 0.5 | 19 | 18 | 17 | 15 | 13 | 10 | 8 | - | - | - | - | - | - | - | - | - |
| **PVT 4-3** | 32x32 | 0.55 | 0.75 | 28 | 27 | 26 | 24 | 20 | 18 | 13 | - | - | - | - | - | - | - | - | - |
| **PVT 4-4** | 32x32 | 0.75 | 1 | 38 | 36 | 34 | 32 | 27 | 24 | 19 | - | - | - | - | - | - | - | - | - |
| **PVT 4-5** | 32x32 | 1.1 | 1.5 | 47 | 45 | 43 | 40 | 34 | 31 | 23 | - | - | - | - | - | - | - | - | - |
| **PVT 4-6** | 32x32 | 1.1 | 1.5 | 56 | 54 | 52 | 48 | 41 | 37 | 28 | - | - | - | - | - | - | - | - | - |
| **PVT 4-7** | 32x32 | 1.5 | 2 | 66 | 63 | 61 | 56 | 48 | 43 | 33 | - | - | - | - | - | - | - | - | - |
| **PVT 4-8** | 32x32 | 1.5 | 2 | 74 | 72 | 70 | 64 | 55 | 50 | 38 | - | - | - | - | - | - | - | - | - |
| **PVT 4-10** | 32x32 | 2.2 | 3 | 96 | 90 | 87 | 81 | 71 | 62 | 48 | - | - | - | - | - | - | - | - | - |
| **PVT 4-12** | 32x32 | 2.2 | 3 | 114 | 108 | 104 | 95 | 85 | 75 | 58 | - | - | - | - | - | - | - | - | - |
| **PVT 4-14** | 32x32 | 3 | 4 | 136 | 126 | 122 | 112 | 101 | 89 | 68 | - | - | - | - | - | - | - | - | - |
| **PVT 4-16** | 32x32 | 3 | 4 | 152 | 144 | 140 | 129 | 115 | 101 | 78 | - | - | - | - | - | - | - | - | - |
| **PVT 4-19** | 32x32 | 4 | 5.5 | 183 | 171 | 168 | 153 | 137 | 122 | 93 | - | - | - | - | - | - | - | - | - |
| **PVT 4-22** | 32x32 | 4 | 5.5 | 211 | 200 | 192 | 178 | 160 | 138 | 108 | - | - | - | - | - | - | - | - | - |
| **PVT 8-2-1** | 40x40 | 0.75 | 1 | - | - | - | - | 10 | 9.5 | 9.3 | 9 | 8.5 | 8 | 7 | 6 | - | - | - | - |
| **PVT 8-2** | 40x40 | 0.75 | 1 | - | - | - | - | 20 | 19.5 | 19 | 18 | 17 | 16 | 14 | 13 | - | - | - | - |
| **PVT 8-3** | 40x40 | 1.1 | 1.5 | - | - | - | - | 30 | 29.5 | 28.5 | 27 | 25 | 24 | 21 | 19 | - | - | - | - |
| **PVT 8-4** | 40x40 | 1.5 | 2 | - | - | - | - | 41 | 39.5 | 38 | 36 | 34 | 32 | 28 | 26 | - | - | - | - |
| **PVT 8-5** | 40x40 | 2.2 | 3 | - | - | - | - | 52 | 50 | 48 | 45 | 42 | 40 | 36 | 32 | - | - | - | - |
| **PVT 8-6** | 40x40 | 2.2 | 3 | - | - | - | - | 62 | 60 | 57 | 54 | 51 | 48 | 43 | 39 | - | - | - | - |
| **PVT 8-8** | 40x40 | 3 | 4 | - | - | - | - | 83 | 80 | 77 | 73 | 69 | 65 | 58 | 52 | - | - | - | - |
| **PVT 8-10** | 40x40 | 4 | 5.5 | - | - | - | - | 104 | 100 | 97 | 92 | 87 | 81 | 73 | 65 | - | - | - | - |
| **PVT 8-12** | 40x40 | 4 | 5.5 | - | - | - | - | 124 | 120 | 116 | 111 | 104 | 92 | 87 | 78 | - | - | - | - |
| **PVT 8-14** | 40x40 | 5.5 | 7.5 | - | - | - | - | 145 | 141 | 136 | 130 | 122 | 113 | 102 | 92 | - | - | - | - |
| **PVT 8-16** | 40x40 | 5.5 | 7.5 | - | - | - | - | 166 | 161 | 156 | 148 | 139 | 130 | 118 | 106 | - | - | - | - |
| **PVT 8-18** | 40x40 | 7.5 | 10 | - | - | - | - | 187 | 182 | 175 | 167 | 157 | 146 | 134 | 120 | - | - | - | - |
| **PVT 8-20** | 40x40 | 7.5 | 10 | - | - | - | - | 208 | 202 | 195 | 186 | 175 | 163 | 150 | 135 | - | - | - | - |
| **PVT 10-1** | 40x40 | 0.75 | 1 | - | - | - | - | 9.7 | 9.3 | 8.9 | 8.3 | 7.7 | 7 | 6 | 5 | 4 | - | - | - |
| **PVT 10-2** | 40x40 | 0.75 | 1 | - | - | - | - | 19.5 | 19 | 18 | 17 | 16 | 15 | 13.5 | 11.5 | 10 | - | - | - |
| **PVT 10-3** | 40x40 | 1.1 | 1.5 | - | - | - | - | 29.5 | 29 | 28 | 27 | 25 | 23 | 21 | 18 | 16 | - | - | - |
| **PVT 10-4** | 40x40 | 1.5 | 2 | - | - | - | - | 39.5 | 38.5 | 37.5 | 36 | 34 | 31 | 28 | 25 | 22 | - | - | - |
| **PVT 10-5** | 40x40 | 2.2 | 3 | - | - | - | - | 49.5 | 48.5 | 47 | 44 | 42 | 39 | 35 | 32 | 28 | - | - | - |
| **PVT 10-6** | 40x40 | 2.2 | 3 | - | - | - | - | 60 | 58 | 56 | 54 | 51 | 48 | 43 | 39 | 34 | - | - | - |
| **PVT 10-7** | 40x40 | 3 | 4 | - | - | - | - | 70 | 68 | 66 | 63 | 60 | 56 | 51 | 45 | 39 | - | - | - |
| **PVT 10-8** | 40x40 | 3 | 4 | - | - | - | - | 80 | 78 | 75 | 73 | 69 | 64 | 58 | 52 | 44 | - | - | - |
| **PVT 10-9** | 40x40 | 3 | 4 | - | - | - | - | 90 | 87 | 85 | 81 | 77 | 72 | 66 | 58 | 50 | - | - | - |
| **PVT 10-10** | 40x40 | 4 | 5.5 | - | - | - | - | 100 | 97 | 95 | 90 | 85 | 80 | 74 | 66 | 56 | - | - | - |
| **PVT 10-12** | 40x40 | 4 | 5.5 | - | - | - | - | 120 | 117 | 114 | 109 | 104 | 96 | 89 | 79 | 68 | - | - | - |
| **PVT 10-14** | 40x40 | 5.5 | 7.5 | - | - | - | - | 140 | 137 | 134 | 129 | 122 | 113 | 103 | 92 | 79 | - | - | - |
| **PVT 10-16** | 40x40 | 5.5 | 7.5 | - | - | - | - | 160 | 158 | 153 | 148 | 140 | 129 | 119 | 106 | 91 | - | - | - |
| **PVT 10-18** | 40x40 | 7.5 | 10 | - | - | - | - | 180 | 177 | 172 | 166 | 156 | 145 | 133 | 119 | 102 | - | - | - |
| **PVT 10-20** | 40x40 | 7.5 | 10 | - | - | - | - | 200 | 196 | 191 | 184 | 173 | 162 | 147 | 132 | 114 | - | - | - |
| **PVT 10-22** | 40x40 | 7.5 | 10 | - | - | - | - | 220 | 216 | 210 | 202 | 190 | 178 | 162 | 145 | 126 | - | - | - |
| **PVT 12-2** | 50x50 | 1.5 | 2 | - | - | - | - | - | - | 23.5 | 23 | 22.5 | 22 | 21 | 20 | 18.5 | 17 | 15.5 | 14 |
| **PVT 12-3** | 50x50 | 2.2 | 3 | - | - | - | - | - | - | 35.5 | 35 | 34 | 33 | 31.5 | 30 | 28 | 26 | 23.5 | 21 |
| **PVT 12-4** | 50x50 | 3 | 4 | - | - | - | - | - | - | 47 | 46 | 45 | 44 | 42 | 40 | 37 | 34 | 31 | 28 |
| **PVT 12-5** | 50x50 | 3 | 4 | - | - | - | - | - | - | 59.5 | 58 | 56.5 | 55 | 52.5 | 50 | 46.5 | 43 | 39 | 35 |
| **PVT 12-6** | 50x50 | 4 | 5.5 | - | - | - | - | - | - | 71.5 | 70 | 68 | 66 | 63 | 60 | 56 | 52 | 47 | 42 |
| **PVT 12-7** | 50x50 | 5.5 | 7.5 | - | - | - | - | - | - | 83.5 | 82 | 79.5 | 77 | 73.5 | 70 | 65.5 | 61 | 55 | 49 |
| **PVT 12-8** | 50x50 | 5.5 | 7.5 | - | - | - | - | - | - | 95.5 | 94 | 91 | 88 | 84 | 80 | 75 | 70 | 63 | 56 |
| **PVT 12-9** | 50x50 | 5.5 | 7.5 | - | - | - | - | - | - | 108 | 106 | 103 | 100 | 95.5 | 91 | 85 | 79 | 71.5 | 64 |
| **PVT 12-10** | 50x50 | 7.5 | 10 | - | - | - | - | - | - | 120 | 118 | 114.5 | 111 | 106 | 101 | 94.5 | 88 | 80 | 72 |
| **PVT 12-12** | 50x50 | 7.5 | 10 | - | - | - | - | - | - | 143.5 | 141 | 137 | 133 | 127 | 121 | 113.5 | 106 | 96 | 86 |
| **PVT 12-14** | 50x50 | 11 | 15 | - | - | - | - | - | - | 168 | 165 | 160 | 155 | 148 | 141 | 132.5 | 124 | 112 | 100 |
| **PVT 12-16** | 50x50 | 11 | 15 | - | - | - | - | - | - | 192.5 | 189 | 183.5 | 178 | 170 | 162 | 152 | 142 | 128.5 | 115 |
| **PVT 12-18** | 50x50 | 11 | 15 | - | - | - | - | - | - | 217 | 213 | 207.5 | 202 | 192.5 | 183 | 171.5 | 160 | 145 | 130 |

**PVS also available**/*también disponible/aussi disponible*

**Performance curve in page**/*Curva en página/Courbe en page* **182-185**



## TECHNICAL DATA/*DATOS TÉCNICOS/DONNÉES TECHNIQUES*

**50 Hz** **n=2900 1/min**

| MODEL *MODELO MODÈLE* | DN | Power *Potencia Puissance* | | Q=DELIVERY/*CAUDAL/DÉBIT* | | | | | | | | | | | | | | | |
|---|---|---|---|---|---|---|---|---|---|---|---|---|---|---|---|---|---|---|---|
| | | | | us gpm | 35 | 44 | 53 | 62 | 70 | 79 | 88 | 97 | 106 | 115 | 123 | 141 | 159 | 176 |
| | | | | l/min | 133 | 167 | 200 | 233 | 267 | 300 | 333 | 367 | 400 | 433 | 467 | 533 | 600 | 667 |
| | | | | m³/h | 8 | 10 | 12 | 14 | 16 | 18 | 20 | 22 | 24 | 26 | 28 | 32 | 36 | 40 |
| | mm | kw | hp | H=Head/*Altura/Hauteur*(*m*) | | | | | | | | | | | | | | |
| **PVT 16-2** | 50x50 | 2.2 | 3 | 27 | 26 | 25 | 24 | 22 | 21 | 19 | 16 | - | - | - | - | - | - |
| **PVT 16-3** | 50x50 | 3 | 4 | 41 | 40 | 38 | 37 | 34 | 32 | 29 | 25 | - | - | - | - | - | - |
| **PVT 16-4** | 50x50 | 4 | 5.5 | 54 | 53 | 52 | 49 | 46 | 43 | 38 | 34 | - | - | - | - | - | - |
| **PVT 16-5** | 50x50 | 5.5 | 7.5 | 68 | 67 | 65 | 62 | 58 | 54 | 48 | 43 | - | - | - | - | - | - |
| **PVT 16-6** | 50x50 | 5.5 | 7.5 | 82 | 80 | 78 | 74 | 70 | 64 | 58 | 52 | - | - | - | - | - | - |
| **PVT 16-7** | 50x50 | 7.5 | 10 | 96 | 95 | 91 | 87 | 82 | 76 | 68 | 61 | - | - | - | - | - | - |
| **PVT 16-8** | 50x50 | 7.5 | 10 | 110 | 108 | 104 | 99 | 94 | 86 | 77 | 70 | - | - | - | - | - | - |
| **PVT 16-10** | 50x50 | 11 | 15 | 138 | 136 | 131 | 125 | 118 | 109 | 97 | 87 | - | - | - | - | - | - |
| **PVT 16-12** | 50x50 | 11 | 15 | 166 | 162 | 157 | 150 | 141 | 130 | 116 | 105 | - | - | - | - | - | - |
| **PVT 16-14** | 50x50 | 15 | 20 | 194 | 190 | 184 | 175 | 166 | 152 | 136 | 122 | - | - | - | - | - | - |
| **PVT 16-16** | 50x50 | 15 | 20 | 222 | 217 | 210 | 200 | 189 | 174 | 156 | 140 | - | - | - | - | - | - |
| **PVT 20-1** | 50x50 | 1.1 | 1.5 | - | 13.5 | 13 | 12.5 | 12 | 11 | 10 | 9 | 8 | 7 | 6 | - | - | - |
| **PVT 20-2** | 50x50 | 2.2 | 3 | - | 27 | 26.5 | 26 | 25 | 24 | 23 | 22 | 20 | 18 | 15 | - | - | - |
| **PVT 20-3** | 50x50 | 4 | 5.5 | - | 40 | 39.5 | 39 | 38 | 37 | 35 | 33 | 30 | 27 | 24 | - | - | - |
| **PVT 20-4** | 50x50 | 5.5 | 7.5 | - | 54 | 53 | 52 | 51 | 49 | 47 | 44 | 41 | 37 | 33 | - | - | - |
| **PVT 20-5** | 50x50 | 5.5 | 7.5 | - | 67 | 66 | 64 | 62 | 60 | 58 | 55 | 50 | 45 | 40 | - | - | - |
| **PVT 20-6** | 50x50 | 7.5 | 10 | - | 81 | 79 | 77 | 75 | 73 | 70 | 66 | 61 | 55 | 49 | - | - | - |
| **PVT 20-7** | 50x50 | 7.5 | 10 | - | 95 | 93 | 91 | 89 | 86 | 82 | 77 | 71 | 65 | 58 | - | - | - |
| **PVT 20-8** | 50x50 | 11 | 15 | - | 109 | 107 | 105 | 102 | 99 | 94 | 89 | 82 | 75 | 67 | - | - | - |
| **PVT 20-10** | 50x50 | 11 | 15 | - | 136 | 134 | 131 | 128 | 124 | 118 | 111 | 103 | 95 | 85 | - | - | - |
| **PVT 20-12** | 50x50 | 15 | 20 | - | 164 | 162 | 158 | 154 | 149 | 142 | 133 | 124 | 114 | 102 | - | - | - |
| **PVT 20-14** | 50x50 | 15 | 20 | - | 192 | 189 | 185 | 180 | 174 | 166 | 156 | 145 | 133 | 119 | - | - | - |
| **PVT 20-17** | 50x50 | 18.5 | 25 | - | 234 | 230 | 225 | 219 | 212 | 202 | 190 | 177 | 162 | 145 | - | - | - |
| **PVT 32-10-1** | 65x65 | 1.5 | 2 | - | - | - | - | 14 | 14 | 13 | 13 | 12 | 12 | 11 | 9 | 7 | 4 |
| **PVT 32-10** | 65x65 | 2.2 | 3 | - | - | - | - | 18 | 18 | 17 | 16 | 15 | 15 | 14 | 13 | 11 | 8 |
| **PVT 32-20-2** | 65x65 | 3 | 4 | - | - | - | - | 29 | 29 | 28 | 27 | 26 | 25 | 23 | 20 | 16 | 11 |
| **PVT 32-20** | 65x65 | 4 | 5.5 | - | - | - | - | 36 | 35 | 34 | 33 | 32 | 31 | 29 | 27 | 23 | 18 |
| **PVT 32-30-2** | 65x65 | 5.5 | 7.5 | - | - | - | - | 47 | 46 | 44 | 43 | 41 | 40 | 38 | 33 | 28 | 21 |
| **PVT 32-30** | 65x65 | 5.5 | 7.5 | - | - | - | - | 54 | 53 | 51 | 50 | 48 | 46 | 44 | 40 | 35 | 27 |
| **PVT 32-40-2** | 65x65 | 7.5 | 10 | - | - | - | - | 65 | 64 | 62 | 60 | 58 | 56 | 53 | 46 | 40 | 30 |
| **PVT 32-40** | 65x65 | 7.5 | 10 | - | - | - | - | 72 | 71 | 69 | 67 | 65 | 62 | 59 | 53 | 47 | 37 |
| **PVT 32-50-2** | 65x65 | 11 | 15 | - | - | - | - | 83 | 81 | 79 | 77 | 74 | 71 | 68 | 60 | 52 | 41 |
| **PVT 32-50** | 65x65 | 11 | 15 | - | - | - | - | 90 | 88 | 86 | 84 | 81 | 78 | 74 | 67 | 59 | 47 |
| **PVT 32-60-2** | 65x65 | 11 | 15 | - | - | - | - | 101 | 99 | 97 | 94 | 90 | 87 | 83 | 74 | 65 | 51 |
| **PVT 32-60** | 65x65 | 11 | 15 | - | - | - | - | 108 | 106 | 104 | 101 | 97 | 94 | 90 | 81 | 72 | 57 |
| **PVT 32-70-2** | 65x65 | 15 | 20 | - | - | - | - | 119 | 117 | 114 | 111 | 107 | 103 | 98 | 88 | 78 | 60 |
| **PVT 32-70** | 65x65 | 15 | 20 | - | - | - | - | 126 | 124 | 121 | 117 | 113 | 109 | 105 | 95 | 85 | 67 |
| **PVT 32-80-2** | 65x65 | 15 | 20 | - | - | - | - | 136 | 134 | 131 | 127 | 123 | 119 | 114 | 102 | 90 | 71 |
| **PVT 32-80** | 65x65 | 15 | 20 | - | - | - | - | 144 | 141 | 138 | 134 | 130 | 125 | 120 | 109 | 97 | 77 |
| **PVT 32-90-2** | 65x65 | 18.5 | 25 | - | - | - | - | 154 | 151 | 148 | 144 | 140 | 135 | 129 | 117 | 102 | 82 |
| **PVT 32-90** | 65x65 | 18.5 | 25 | - | - | - | - | 162 | 159 | 156 | 152 | 147 | 142 | 136 | 124 | 109 | 88 |
| **PVT 32-100-2** | 65x65 | 18.5 | 25 | - | - | - | - | 175 | 171 | 166 | 162 | 157 | 152 | 146 | 131 | 115 | 91 |
| **PVT 32-100** | 65x65 | 18.5 | 25 | - | - | - | - | 182 | 178 | 173 | 169 | 164 | 158 | 152 | 138 | 122 | 98 |
| **PVT 32-110-2** | 65x65 | 22 | 30 | - | - | - | - | 193 | 189 | 184 | 179 | 173 | 169 | 164 | 146 | 128 | 102 |
| **PVT 32-110** | 65x65 | 22 | 30 | - | - | - | - | 200 | 196 | 191 | 186 | 180 | 174 | 168 | 153 | 135 | 109 |
| **PVT 32-120-2** | 65x65 | 22 | 30 | - | - | - | - | 211 | 206 | 201 | 195 | 189 | 184 | 178 | 160 | 140 | 113 |
| **PVT 32-120** | 65x65 | 22 | 30 | - | - | - | - | 218 | 213 | 208 | 202 | 196 | 190 | 184 | 167 | 147 | 120 |
| **PVT 32-130-2** | 65x65 | 30 | 40 | - | - | - | - | 230 | 224 | 218 | 212 | 206 | 200 | 193 | 174 | 153 | 124 |
| **PVT 32-130** | 65x65 | 30 | 40 | - | - | - | - | 237 | 231 | 225 | 219 | 213 | 207 | 200 | 181 | 160 | 131 |
| **PVT 32-140-2** | 65x65 | 30 | 40 | - | - | - | - | 247 | 241 | 235 | 229 | 222 | 216 | 210 | 189 | 165 | 135 |
| **PVT 32-140** | 65x65 | 30 | 40 | - | - | - | - | 255 | 249 | 242 | 236 | 229 | 223 | 216 | 196 | 172 | 142 |
| **PVT 32-150-2** | 65x65 | 30 | 40 | - | - | - | - | 266 | 260 | 253 | 246 | 239 | 232 | 224 | 203 | 178 | 145 |
| **PVT 32-150** | 65x65 | 30 | 40 | - | - | - | - | 274 | 267 | 260 | 253 | 246 | 239 | 231 | 210 | 185 | 152 |
| **PVT 32-160-2** | 65x65 | 30 | 40 | - | - | - | - | 284 | 277 | 270 | 263 | 255 | 248 | 240 | 218 | 190 | 156 |
| **PVT 32-160** | 65x65 | 30 | 40 | - | - | - | - | 292 | 285 | 277 | 270 | 262 | 254 | 246 | 225 | 197 | 163 |

**PVS also available**/*también disponible/aussi disponible*

**Performance curve in page**/*Curva en página/Courbe en page* **186-188**

## TECHNICAL DATA/*DATOS TÉCNICOS/DONNÉES TECHNIQUES*

**50 Hz n=2900 1/min**

| MODEL *MODELO MODÈLE* | DN mm | Power *Potencia Puissance* kw | hp | Q=DELIVERY/*CAUDAL/DÉBIT* us gpm | 110 | 132 | 154 | 176 | 185 | 198 | 220 | 242 | 264 | 308 | 352 | 374 | 396 | 441 | 485 |
|---|---|---|---|---|---|---|---|---|---|---|---|---|---|---|---|---|---|---|---|
| | | | | l/min | 417 | 500 | 583 | 667 | 700 | 750 | 833 | 917 | 1000 | 1083 | 1167 | 1333 | 1417 | 1500 | 1667 | 1833 |
| | | | | m³/h | 25 | 30 | 35 | 40 | 42 | 45 | 50 | 55 | 60 | 65 | 70 | 80 | 85 | 90 | 100 | 110 |
| | | | | H=Head/*Altura/Hauteur*(*m*) | | | | | | | | | | | | | | | | |
| **PVT 45-10-1** | 80x80 | 3 | 4 | | 20 | 19 | 18 | 17 | 16 | 15 | 13 | 11 | - | - | - | - | - | - | - | - |
| **PVT 45-10** | 80x80 | 4 | 5.5 | | 24 | 23 | 22 | 21 | 20 | 19 | 18 | 16 | - | - | - | - | - | - | - | - |
| **PVT 45-20-2** | 80x80 | 5.5 | 7.5 | | 40 | 38 | 36 | 33 | 32 | 30 | 27 | 23 | - | - | - | - | - | - | - | - |
| **PVT 45-20** | 80x80 | 7.5 | 10 | | 48 | 46 | 44 | 42 | 41 | 39 | 35 | 31 | - | - | - | - | - | - | - | - |
| **PVT 45-30-2** | 80x80 | 11 | 15 | | 63 | 61 | 58 | 54 | 52 | 50 | 44 | 38 | - | - | - | - | - | - | - | - |
| **PVT 45-30** | 80x80 | 11 | 15 | | 71 | 69 | 66 | 63 | 61 | 58 | 53 | 47 | - | - | - | - | - | - | - | - |
| **PVT 45-40-2** | 80x80 | 15 | 20 | | 87 | 84 | 80 | 75 | 73 | 69 | 62 | 54 | - | - | - | - | - | - | - | - |
| **PVT 45-40** | 80x80 | 15 | 20 | | 95 | 92 | 88 | 84 | 81 | 78 | 71 | 62 | - | - | - | - | - | - | - | - |
| **PVT 45-50-2** | 80x80 | 18.5 | 25 | | 111 | 107 | 102 | 96 | 93 | 88 | 80 | 69 | - | - | - | - | - | - | - | - |
| **PVT 45-50** | 80x80 | 18.5 | 25 | | 119 | 115 | 110 | 105 | 101 | 97 | 88 | 78 | - | - | - | - | - | - | - | - |
| **PVT 45-60-2** | 80x80 | 22 | 30 | | 135 | 130 | 124 | 117 | 113 | 108 | 97 | 85 | - | - | - | - | - | - | - | - |
| **PVT 45-60** | 80x80 | 22 | 30 | | 143 | 138 | 132 | 125 | 122 | 116 | 106 | 93 | - | - | - | - | - | - | - | - |
| **PVT 45-70-2** | 80x80 | 30 | 40 | | 158 | 152 | 146 | 138 | 134 | 127 | 115 | 100 | - | - | - | - | - | - | - | - |
| **PVT 45-70** | 80x80 | 30 | 40 | | 166 | 161 | 154 | 146 | 142 | 135 | 124 | 109 | - | - | - | - | - | - | - | - |
| **PVT 45-80-2** | 80x80 | 30 | 40 | | 182 | 175 | 168 | 159 | 154 | 146 | 133 | 116 | - | - | - | - | - | - | - | - |
| **PVT 45-80** | 80x80 | 30 | 40 | | 190 | 184 | 176 | 167 | 162 | 154 | 141 | 124 | - | - | - | - | - | - | - | - |
| **PVT 45-90-2** | 80x80 | 30 | 40 | | 205 | 198 | 190 | 180 | 174 | 166 | 150 | 132 | - | - | - | - | - | - | - | - |
| **PVT 45-90** | 80x80 | 37 | 50 | | 214 | 207 | 198 | 188 | 183 | 174 | 159 | 140 | - | - | - | - | - | - | - | - |
| **PVT 45-100-2** | 80x80 | 37 | 50 | | 230 | 221 | 212 | 200 | 194 | 185 | 168 | 147 | - | - | - | - | - | - | - | - |
| **PVT 45-100** | 80x80 | 37 | 50 | | 238 | 230 | 220 | 209 | 203 | 193 | 177 | 155 | - | - | - | - | - | - | - | - |
| **PVT 45-110-2** | 80x80 | 45 | 60 | | 255 | 246 | 236 | 223 | 217 | 206 | 188 | 165 | - | - | - | - | - | - | - | - |
| **PVT 45-110** | 80x80 | 45 | 60 | | 263 | 255 | 244 | 232 | 225 | 214 | 196 | 173 | - | - | - | - | - | - | - | - |
| **PVT 45-120-2** | 80x80 | 45 | 60 | | 280 | 270 | 259 | 245 | 238 | 226 | 206 | 181 | - | - | - | - | - | - | - | - |
| **PVT 45-120** | 80x80 | 45 | 60 | | 289 | 280 | 268 | 255 | 247 | 236 | 216 | 190 | - | - | - | - | - | - | - | - |
| **PVT 45-130-2** | 80x80 | 45 | 60 | | 305 | 294 | 282 | 267 | 259 | 247 | 225 | 198 | - | - | - | - | - | - | - | - |
| **PVT 64-10-1** | 100x100 | 4 | 5.5 | | - | 19 | 19 | 18 | 18 | 17 | 16 | 15 | 14 | 13 | 11 | 8 | - | - | - | - |
| **PVT 64-10** | 100x100 | 5.5 | 7.5 | | - | 27 | 26 | 25 | 25 | 24 | 23 | 22 | 21 | 20 | 18 | 15 | - | - | - | - |
| **PVT 64-20-2** | 100x100 | 7.5 | 10 | | - | 39 | 38 | 36 | 36 | 35 | 33 | 31 | 29 | 26 | 23 | 17 | - | - | - | - |
| **PVT 64-20-1** | 100x100 | 11 | 15 | | - | 46 | 45 | 44 | 43 | 42 | 40 | 38 | 36 | 33 | 30 | 24 | - | - | - | - |
| **PVT 64-20** | 100x100 | 11 | 15 | | - | 53 | 52 | 51 | 50 | 49 | 47 | 45 | 43 | 40 | 37 | 30 | - | - | - | - |
| **PVT 64-30-2** | 100x100 | 15 | 20 | | - | 66 | 64 | 62 | 61 | 59 | 56 | 53 | 50 | 46 | 41 | 32 | - | - | - | - |
| **PVT 64-30-1** | 100x100 | 15 | 20 | | - | 73 | 71 | 69 | 68 | 66 | 63 | 60 | 57 | 53 | 48 | 39 | - | - | - | - |
| **PVT 64-30** | 100x100 | 18.5 | 25 | | - | 80 | 78 | 76 | 75 | 73 | 70 | 67 | 64 | 60 | 55 | 46 | - | - | - | - |
| **PVT 64-40-2** | 100x100 | 18.5 | 25 | | - | 92 | 90 | 87 | 86 | 84 | 80 | 76 | 71 | 66 | 60 | 47 | - | - | - | - |
| **PVT 64-40-1** | 100x100 | 22 | 30 | | - | 100 | 97 | 94 | 93 | 91 | 87 | 83 | 78 | 73 | 67 | 54 | - | - | - | - |
| **PVT 64-40** | 100x100 | 22 | 30 | | - | 107 | 104 | 101 | 100 | 98 | 94 | 90 | 85 | 80 | 74 | 61 | - | - | - | - |
| **PVT 64-50-2** | 100x100 | 30 | 40 | | - | 121 | 118 | 114 | 112 | 110 | 105 | 100 | 95 | 88 | 80 | 64 | - | - | - | - |
| **PVT 64-50-1** | 100x100 | 30 | 40 | | - | 128 | 125 | 121 | 119 | 117 | 112 | 107 | 102 | 95 | 87 | 71 | - | - | - | - |
| **PVT 64-50** | 100x100 | 30 | 40 | | - | 136 | 133 | 129 | 127 | 124 | 119 | 114 | 109 | 102 | 94 | 78 | - | - | - | - |
| **PVT 64-60-2** | 100x100 | 30 | 40 | | - | 150 | 146 | 142 | 140 | 137 | 131 | 125 | 118 | 110 | 101 | 81 | - | - | - | - |
| **PVT 64-60-1** | 100x100 | 37 | 50 | | - | 157 | 153 | 149 | 147 | 144 | 138 | 132 | 125 | 117 | 108 | 88 | - | - | - | - |
| **PVT 64-60** | 100x100 | 37 | 50 | | - | 164 | 160 | 156 | 154 | 151 | 145 | 139 | 132 | 124 | 115 | 95 | - | - | - | - |
| **PVT 64-70-2** | 100x100 | 37 | 50 | | - | 179 | 174 | 169 | 167 | 163 | 156 | 149 | 141 | 132 | 121 | 99 | - | - | - | - |
| **PVT 64-70-1** | 100x100 | 37 | 50 | | - | 186 | 181 | 176 | 174 | 170 | 163 | 156 | 148 | 139 | 128 | 106 | - | - | - | - |
| **PVT 64-70** | 100x100 | 45 | 60 | | - | 193 | 188 | 183 | 181 | 177 | 170 | 163 | 155 | 146 | 135 | 112 | - | - | - | - |
| **PVT 64-80-2** | 100x100 | 45 | 60 | | - | 207 | 202 | 196 | 193 | 189 | 182 | 173 | 164 | 154 | 142 | 116 | - | - | - | - |
| **PVT 64-80-1** | 100x100 | 45 | 60 | | - | 215 | 209 | 203 | 200 | 196 | 189 | 180 | 171 | 161 | 149 | 123 | - | - | - | - |
| **PVT 90-10-1** | 100x100 | 5.5 | 7.5 | | - | - | - | - | - | - | 22 | 21 | 19 | 18 | 17 | 16 | 14 | 13 | 10 | 6 |
| **PVT 90-10** | 100x100 | 7.5 | 10 | | - | - | - | - | - | - | 25 | 25 | 24 | 23 | 22 | 21 | 20 | 19 | 16 | 12 |
| **PVT 90-20-2** | 100x100 | 11 | 15 | | - | - | - | - | - | - | 41 | 40 | 39 | 38 | 36 | 32 | 30 | 28 | 22 | 15 |
| **PVT 90-20** | 100x100 | 15 | 20 | | - | - | - | - | - | - | 53 | 52 | 50 | 49 | 47 | 44 | 41 | 40 | 36 | 30 |
| **PVT 90-30-2** | 100x100 | 18.5 | 25 | | - | - | - | - | - | - | 68 | 67 | 65 | 63 | 60 | 55 | 52 | 49 | 41 | 32 |
| **PVT 90-30** | 100x100 | 22 | 30 | | - | - | - | - | - | - | 81 | 79 | 77 | 75 | 72 | 67 | 64 | 62 | 55 | 48 |
| **PVT 90-40-2** | 100x100 | 30 | 40 | | - | - | - | - | - | - | 98 | 96 | 93 | 90 | 87 | 80 | 75 | 72 | 62 | 50 |
| **PVT 90-40** | 100x100 | 30 | 40 | | - | - | - | - | - | - | 110 | 108 | 105 | 103 | 100 | 92 | 86 | 84 | 76 | 66 |
| **PVT 90-50-2** | 100x100 | 37 | 50 | | - | - | - | - | - | - | 126 | 123 | 120 | 117 | 113 | 104 | 98 | 93 | 81 | 68 |
| **PVT 90-50** | 100x100 | 37 | 50 | | - | - | - | - | - | - | 139 | 135 | 131 | 128 | 124 | 115 | 110 | 106 | 94 | 83 |
| **PVT 90-60-2** | 100x100 | 45 | 60 | | - | - | - | - | - | - | 155 | 152 | 148 | 144 | 139 | 129 | 122 | 117 | 102 | 86 |
| **PVT 90-60** | 100x100 | 45 | 60 | | - | - | - | - | - | - | 168 | 164 | 160 | 155 | 150 | 141 | 134 | 130 | 117 | 103 |

**PVS also available/*también disponible/aussi disponible***

**Performance curve in page/*Curva en página/Courbe en page* 189-191**



## MATERIAL DESCRIPTION/*DESCRIPCIÓN DE MATERIAL/DESCRIPTION DU MATÉRIEL*

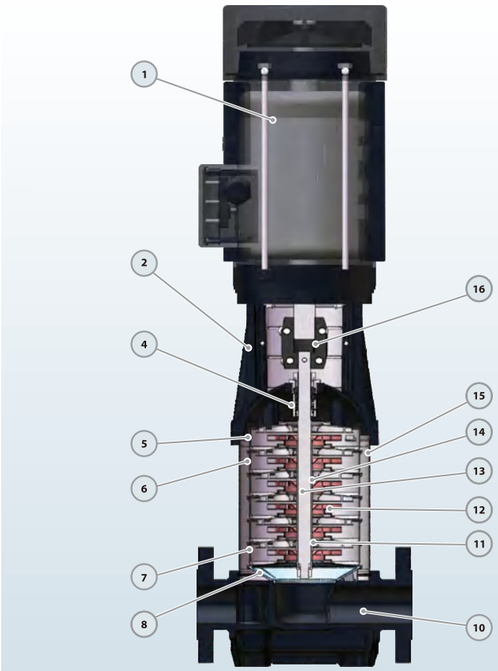


**PVT**

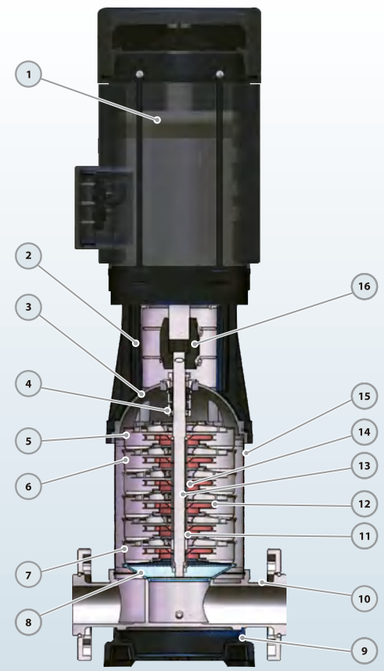


**PVS**

| No. | Description *Descripción Description* | Material *Material Matériel* |
|---|---|---|
| 1 | Motor<br>*Motor*<br>*Moteur* | IP55 Class F<br>*IP55 Clase F*<br>*IP55 classe F* |
| 2 | Pump Case<br>*Cuerpo de Bomba*<br>*Boîtier de pompe* | Cast iron<br>*Fundición*<br>*Fonte* |
| 3 | Seal Base<br>*Soporte Sello*<br>*Seal Base* | SS304<br>*Inox 304*<br>*Inox 304* |
| 4 | Mechanical Seal<br>*Sello Mecánico*<br>*Garniture mécanique* | SS304<br>*Inox 304*<br>*Inox 304* |
| 5 | Top Diffuser<br>*Difusor Tope*<br>*Diffuseur supérieur* | SS304<br>*Inox 304*<br>*Inox 304* |
| 6 | Diffuser<br>*Difusor*<br>*Diffuseur* | SS304<br>*Inox 304*<br>*Inox 304* |
| 7 | Support Diffuser<br>*Difusor Soporte*<br>*Diffuseur de support* | SS304<br>*Inox 304*<br>*Inox 304* |
| 8 | Inducer<br>*Inductor*<br>*Inducteur* | SS304<br>*Inox 304*<br>*Inox 304* |

| No. | Description *Descripción Description* | Material *Material Matériel* |
|---|---|---|
| 9 | Base Plate<br>*Placa Base*<br>*Plaque de base* | Cast iron<br>*Fundición*<br>*Fonte* |
| 10 | Inlet&Outlet Chamber<br>*Cámara de entrada y salida*<br>*Chambre d'entrée et de sortie* | PVT:Cast iron PVS:SS304<br>*PVT:Fundición PVS:Inox304*<br>*PVT: Fonte PVS: Inox304* |
| 11 | Bearing<br>*Cojinete*<br>*Palier* | Tungsten Carbide<br>*Carburo de Tungsteno*<br>*Le carbure de tungstène* |
| 12 | Impeller<br>*Impulsor*<br>*Roue* | SS304<br>*Inox 304*<br>*Inox 304* |
| 13 | Shaft<br>*Eje*<br>*Arbre* | SS304<br>*Inox 304*<br>*Inox 304* |
| 14 | Impeller Sleeve<br>*Casquillo Impulsor*<br>*Manchon de roue* | SS304<br>*Inox 304*<br>*Inox 304* |
| 15 | Cylinder<br>*Cilindro*<br>*Cylindre* | SS304<br>*Inox 304*<br>*Inox 304* |
| 16 | Coupling<br>*Unión*<br>*Couplage* | Carbon Steel<br>*Acero al Carbono*<br>*Acier Carbone* |

## DIMENSIONS AND WEIGHT/*DIMENSIONES Y PESOS/DIMENSIONS ET POIDS*

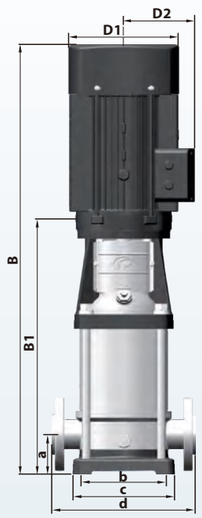


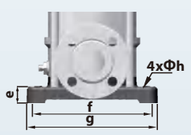


PVS

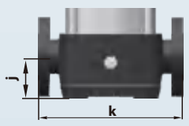


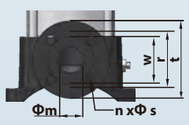


PVT

| MODEL *MODELO MODÈLE* | B1 | B | D1 | D2 | COMMON *COMÚN COMMUN* | kg |
|---|---|---|---|---|---|---|
| **1-2** | 258 | 483 | 148 | 117 | DN=25<br>a=50<br>b=100<br>c=150<br>d=210<br>e=20<br>f=180<br>g=210<br>h=13<br>j=75<br>k=250<br>m=32<br>n=4<br>r=85<br>s=14<br>t=115<br>w=60 | 20 |
| **1-3** | 276 | 501 | 148 | 117 | | 20 |
| **1-4** | 294 | 519 | 148 | 117 | | 21 |
| **1-5** | 312 | 537 | 148 | 117 | | 21 |
| **1-6** | 330 | 555 | 148 | 117 | | 22 |
| **1-7** | 348 | 573 | 148 | 117 | | 23 |
| **1-8** | 366 | 591 | 148 | 117 | | 24 |
| **1-9** | 384 | 609 | 148 | 117 | | 25 |
| **1-10** | 402 | 627 | 148 | 117 | | 26 |
| **1-11** | 420 | 645 | 148 | 117 | | 26 |
| **1-12** | 448 | 693 | 170 | 142 | | 29 |
| **1-13** | 466 | 711 | 170 | 142 | | 30 |
| **1-15** | 502 | 747 | 170 | 142 | | 31 |
| **1-17** | 538 | 783 | 170 | 142 | | 33 |
| **1-19** | 574 | 819 | 170 | 142 | | 34 |
| **1-21** | 610 | 855 | 170 | 142 | | 35 |
| **1-23** | 646 | 891 | 170 | 142 | | 36 |
| **1-25** | 692 | 982 | 190 | 155 | | 42 |
| **1-27** | 728 | 1018 | 190 | 155 | | 43 |
| **1-30** | 782 | 1072 | 190 | 155 | | 45 |
| **1-33** | 836 | 1126 | 190 | 155 | | 49 |
| **1-36** | 890 | 1180 | 190 | 155 | | 51 |
| **2-2** | 258 | 483 | 148 | 117 | | 20 |
| **2-3** | 276 | 501 | 148 | 117 | | 20 |
| **2-4** | 294 | 519 | 148 | 117 | | 22 |
| **2-5** | 312 | 537 | 148 | 117 | | 23 |
| **2-6** | 340 | 585 | 170 | 142 | | 26 |
| **2-7** | 358 | 603 | 170 | 142 | | 26 |
| **2-9** | 394 | 639 | 170 | 142 | | 28 |
| **2-11** | 430 | 675 | 170 | 142 | | 29 |
| **2-13** | 476 | 766 | 190 | 155 | | 35 |
| **2-15** | 512 | 802 | 190 | 155 | | 36 |
| **2-18** | 566 | 856 | 190 | 155 | | 41 |
| **2-22** | 638 | 928 | 190 | 155 | | 42 |
| **2-26** | 720 | 1065 | 197 | 165 | | 52 |
| **3-2** | 258 | 483 | 148 | 117 | | 20 |
| **3-3** | 276 | 501 | 148 | 117 | | 20 |
| **3-4** | 294 | 519 | 148 | 117 | | 21 |
| **3-5** | 312 | 537 | 148 | 117 | | 21 |
| **3-6** | 330 | 555 | 148 | 117 | | 23 |
| **3-7** | 348 | 573 | 148 | 117 | | 24 |
| **3-8** | 376 | 621 | 170 | 142 | | 27 |
| **3-9** | 394 | 639 | 170 | 142 | | 28 |
| **3-10** | 412 | 657 | 170 | 142 | | 28 |
| **3-11** | 430 | 675 | 170 | 142 | | 29 |
| **3-12** | 448 | 693 | 170 | 142 | | 30 |
| **3-13** | 466 | 711 | 170 | 142 | | 31 |
| **3-15** | 502 | 747 | 170 | 142 | | 32 |
| **3-17** | 548 | 838 | 190 | 155 | | 38 |
| **3-19** | 584 | 874 | 190 | 155 | | 39 |
| **3-21** | 620 | 910 | 190 | 155 | | 42 |
| **3-23** | 656 | 946 | 190 | 155 | | 43 |
| **3-25** | 692 | 982 | 190 | 155 | | 44 |
| **3-27** | 728 | 1018 | 190 | 155 | | 45 |
| **3-29** | 764 | 1054 | 190 | 155 | | 46 |
| **3-31** | 810 | 1155 | 197 | 165 | | 54 |
| **3-33** | 846 | 1191 | 197 | 165 | | 55 |
| **3-36** | 900 | 1245 | 197 | 165 | | 57 |

| MODEL *MODELO MODÈLE* | B1 | B | D1 | D2 | COMMON *COMÚN COMMUN* | kg |
|---|---|---|---|---|---|---|
| **4-2** | 276 | 501 | 148 | 117 | DN=32<br>a=50<br>b=100<br>c=150<br>d=210<br>e=20<br>f=180<br>g=210<br>h=13<br>j=75<br>k=250<br>m=32<br>n=4<br>r=100<br>s=18<br>t=140<br>w=60 | 21 |
| **4-3** | 303 | 528 | 148 | 117 | | 22 |
| **4-4** | 340 | 585 | 170 | 142 | | 25 |
| **4-5** | 367 | 612 | 170 | 142 | | 27 |
| **4-6** | 394 | 639 | 170 | 142 | | 27 |
| **4-7** | 431 | 721 | 190 | 155 | | 33 |
| **4-8** | 458 | 748 | 190 | 155 | | 33 |
| **4-10** | 512 | 802 | 190 | 155 | | 37 |
| **4-12** | 566 | 856 | 190 | 155 | | 38 |
| **4-14** | 630 | 975 | 197 | 165 | | 46 |
| **4-16** | 684 | 1029 | 197 | 165 | | 48 |
| **4-19** | 765 | 1120 | 230 | 188 | | 57 |
| **4-22** | 846 | 1201 | 230 | 188 | | 59 |
| **8-2-1** | 347 | 592 | 170 | 142 | DN=40<br>a=80<br>b=130<br>c=199<br>d=260<br>e=25<br>f=215<br>g=247<br>h=14<br>j=80<br>k=280<br>m=50<br>n=4<br>r=110<br>s=18<br>t=150<br>w=80 | 32 |
| **8-2** | 347 | 592 | 170 | 142 | | 32 |
| **8-3** | 377 | 622 | 170 | 142 | | 34 |
| **8-4** | 417 | 707 | 190 | 155 | | 40 |
| **8-5** | 447 | 737 | 190 | 155 | | 44 |
| **8-6** | 477 | 767 | 190 | 155 | | 45 |
| **8-8** | 547 | 892 | 197 | 165 | | 53 |
| **8-10** | 607 | 962 | 230 | 188 | | 64 |
| **8-12** | 667 | 1022 | 230 | 188 | | 66 |
| **8-14** | 747 | 1137 | 260 | 208 | | 81 |
| **8-16** | 807 | 1197 | 260 | 208 | | 84 |
| **8-18** | 867 | 1257 | 260 | 208 | | 93 |
| **8-20** | 927 | 1317 | 260 | 208 | | 94 |
| **10-1** | 347 | 592 | 170 | 142 | | 40 |
| **10-2** | 347 | 592 | 170 | 142 | | 41 |
| **10-3** | 377 | 622 | 170 | 142 | | 43 |
| **10-4** | 417 | 707 | 190 | 155 | | 49 |
| **10-5** | 447 | 737 | 190 | 155 | | 53 |
| **10-6** | 477 | 767 | 190 | 155 | | 54 |
| **10-7** | 517 | 862 | 197 | 165 | | 64 |
| **10-8** | 547 | 892 | 197 | 165 | | 65 |
| **10-9** | 577 | 922 | 197 | 165 | | 66 |
| **10-10** | 607 | 962 | 230 | 188 | | 74 |
| **10-12** | 667 | 1022 | 230 | 188 | | 76 |
| **10-14** | 747 | 1137 | 260 | 208 | | 100 |
| **10-16** | 807 | 1197 | 260 | 208 | | 102 |
| **10-18** | 867 | 1257 | 260 | 208 | | 107 |
| **10-20** | 927 | 1317 | 260 | 208 | | 109 |
| **10-22** | 987 | 1377 | 260 | 208 | | 111 |
| **12-2** | 367 | 657 | 190 | 155 | DN=50<br>a=90<br>b=130<br>c=199<br>d=260<br>e=35<br>f=215<br>g=247<br>h=14<br>j=90<br>k=300<br>m=50<br>n=4<br>r=125<br>s=18<br>t=165<br>w=80 | 39 |
| **12-3** | 397 | 687 | 190 | 155 | | 43 |
| **12-4** | 437 | 782 | 197 | 165 | | 51 |
| **12-5** | 467 | 812 | 197 | 165 | | 53 |
| **12-6** | 497 | 852 | 230 | 188 | | 61 |
| **12-7** | 547 | 937 | 260 | 208 | | 73 |
| **12-8** | 577 | 967 | 260 | 208 | | 74 |
| **12-9** | 607 | 997 | 260 | 208 | | 76 |
| **12-10** | 637 | 1027 | 260 | 208 | | 83 |
| **12-12** | 697 | 1087 | 260 | 208 | | 87 |
| **12-14** | 845 | 1345 | 330 | 255 | | 157 |
| **12-16** | 905 | 1405 | 330 | 255 | | 161 |
| **12-18** | 965 | 1465 | 330 | 255 | | 164 |



## DIMENSIONS AND WEIGHT/*DIMENSIONES Y PESOS/DIMENSIONS ET POIDS*

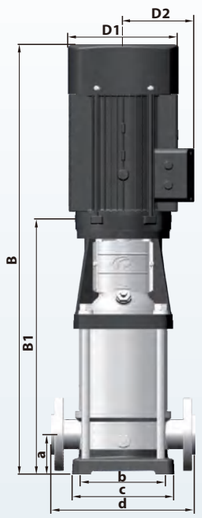


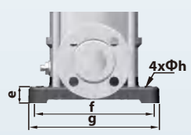


PVS

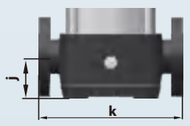


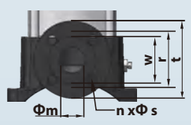


PVT

| MODEL *MODELO MODÈLE* | B1 | B | D1 | D2 | COMMON *COMÚN COMMUN* | kg |
|---|---|---|---|---|---|---|
| **16-2** | 397 | 687 | 190 | 155 | DN=50<br>a=90<br>b=130<br>c=199<br>d=260<br>e=35<br>f=215<br>g=247<br>h=14<br>j=90<br>k=300<br>m=50<br>n=4<br>r=125<br>s=18<br>t=165<br>w=80 | 42 |
| **16-3** | 452 | 797 | 197 | 165 | | 50 |
| **16-4** | 497 | 852 | 230 | 188 | | 59 |
| **16-5** | 562 | 952 | 260 | 208 | | 76 |
| **16-6** | 607 | 997 | 260 | 208 | | 77 |
| **16-7** | 652 | 1042 | 260 | 208 | | 84 |
| **16-8** | 697 | 1087 | 260 | 208 | | 86 |
| **16-10** | 875 | 1375 | 330 | 255 | | 158 |
| **16-12** | 965 | 1465 | 330 | 255 | | 161 |
| **16-14** | 1055 | 1555 | 330 | 255 | | 174 |
| **16-16** | 1145 | 1645 | 330 | 255 | | 178 |
| **20-1** | 387 | 632 | 170 | 142 | | 33 |
| **20-2** | 397 | 687 | 190 | 155 | | 42 |
| **20-3** | 452 | 807 | 230 | 188 | | 58 |
| **20-4** | 517 | 907 | 260 | 208 | | 74 |
| **20-5** | 562 | 952 | 260 | 208 | | 76 |
| **20-6** | 607 | 997 | 260 | 208 | | 82 |
| **20-7** | 652 | 1042 | 260 | 208 | | 84 |
| **20-8** | 785 | 1285 | 330 | 255 | | 153 |
| **20-10** | 875 | 1375 | 330 | 255 | | 157 |
| **20-12** | 965 | 1465 | 330 | 255 | | 170 |
| **20-14** | 1055 | 1555 | 330 | 255 | | 172 |
| **20-17** | 1190 | 1740 | 330 | 255 | | 195 |
| **32-10-1** | 505 | 795 | 190 | 155 | DN=65<br>a=105<br>b=170<br>c=225<br>d=320<br>e=30<br>f=240<br>g=298<br>h=14<br>j=105<br>k=320<br>m=74<br>n=8<br>r=145<br>s=18<br>t=185<br>w=107 | 64 |
| **32-10** | 505 | 795 | 190 | 155 | | 68 |
| **32-20-2** | 575 | 920 | 197 | 165 | | 77 |
| **32-20** | 575 | 930 | 230 | 188 | | 85 |
| **32-30-2** | 645 | 1035 | 260 | 208 | | 100 |
| **32-30** | 645 | 1035 | 260 | 208 | | 100 |
| **32-40-2** | 715 | 1105 | 260 | 208 | | 109 |
| **32-40** | 715 | 1105 | 260 | 208 | | 109 |
| **32-50-2** | 890 | 1390 | 330 | 255 | | 181 |
| **32-50** | 890 | 1390 | 330 | 255 | | 181 |
| **32-60-2** | 960 | 1460 | 330 | 255 | | 185 |
| **32-60** | 960 | 1460 | 330 | 255 | | 185 |
| **32-70-2** | 1030 | 1530 | 330 | 255 | | 199 |
| **32-70** | 1030 | 1530 | 330 | 255 | | 199 |
| **32-80-2** | 1100 | 1600 | 330 | 255 | | 203 |
| **32-80** | 1100 | 1600 | 330 | 255 | | 203 |
| **32-90-2** | 1170 | 1720 | 330 | 255 | | 222 |
| **32-90** | 1170 | 1720 | 330 | 255 | | 222 |
| **32-100-2** | 1240 | 1790 | 330 | 255 | | 227 |
| **32-100** | 1240 | 1790 | 330 | 255 | | 227 |
| **32-110-2** | 1310 | 1885 | 360 | 285 | | 272 |
| **32-110** | 1310 | 1885 | 360 | 285 | | 272 |
| **32-120-2** | 1380 | 1955 | 360 | 285 | | 276 |
| **32-120** | 1380 | 1955 | 360 | 285 | | 276 |
| **32-130-2** | 1450 | 2100 | 400 | 310 | | 337 |
| **32-130** | 1450 | 2100 | 400 | 310 | | 337 |
| **32-140-2** | 1520 | 2170 | 400 | 310 | | 341 |
| **32-140** | 1520 | 2170 | 400 | 310 | | 341 |
| **32-150-2** | 1590 | 2240 | 400 | 310 | | 345 |
| **32-150** | 1590 | 2240 | 400 | 310 | | 345 |
| **32-160-2** | 1660 | 2310 | 400 | 310 | | 350 |
| **32-160** | 1660 | 2310 | 400 | 310 | | 350 |

| MODEL *MODELO MODÈLE* | B1 | B | D1 | D2 | COMMON *COMÚN COMMUN* | kg |
|---|---|---|---|---|---|---|
| **45-10-1** | 561 | 906 | 197 | 165 | DN=80<br>a=140<br>b=190<br>c=245<br>d=365<br>e=45<br>f=266<br>g=330<br>h=14<br>j=140<br>k=365<br>m=80<br>n=8<br>r=160<br>s=18<br>t=200<br>w=120 | 83 |
| **45-10** | 561 | 916 | 230 | 188 | | 90 |
| **45-20-2** | 641 | 1031 | 260 | 208 | | 105 |
| **45-20** | 641 | 1031 | 260 | 208 | | 110 |
| **45-30-2** | 826 | 1326 | 330 | 255 | | 183 |
| **45-30** | 826 | 1326 | 330 | 255 | | 183 |
| **45-40-2** | 906 | 1406 | 330 | 255 | | 197 |
| **45-40** | 906 | 1406 | 330 | 255 | | 197 |
| **45-50-2** | 986 | 1536 | 330 | 255 | | 221 |
| **45-50** | 986 | 1536 | 330 | 255 | | 221 |
| **45-60-2** | 1066 | 1641 | 360 | 285 | | 261 |
| **45-60** | 1066 | 1641 | 360 | 285 | | 261 |
| **45-70-2** | 1146 | 1796 | 400 | 310 | | 320 |
| **45-70** | 1146 | 1796 | 400 | 310 | | 320 |
| **45-80-2** | 1226 | 1876 | 400 | 310 | | 324 |
| **45-80** | 1226 | 1876 | 400 | 310 | | 324 |
| **45-90-2** | 1306 | 1956 | 400 | 310 | | 328 |
| **45-90** | 1306 | 1956 | 400 | 310 | | 352 |
| **45-100-2** | 1386 | 2036 | 400 | 310 | | 355 |
| **45-100** | 1386 | 2036 | 400 | 310 | | 355 |
| **45-110-2** | 1466 | 2151 | 450 | 345 | | 426 |
| **45-110** | 1466 | 2151 | 450 | 345 | | 426 |
| **45-120-2** | 1546 | 2231 | 450 | 345 | | 432 |
| **45-120** | 1546 | 2231 | 450 | 345 | | 432 |
| **45-130-2** | 1626 | 2311 | 450 | 345 | | 438 |
| **64-10-1** | 561 | 916 | 230 | 188 | DN=100<br>a=140<br>b=190<br>c=245<br>d=365<br>e=45<br>f=266<br>g=330<br>h=14<br>j=140<br>k=365<br>m=100<br>n=8<br>r=180<br>s=18<br>t=220<br>w=150 | 93 |
| **64-10** | 561 | 951 | 260 | 208 | | 105 |
| **64-20-2** | 644 | 1034 | 260 | 208 | | 110 |
| **64-20-1** | 754 | 1254 | 330 | 255 | | 182 |
| **64-20** | 754 | 1254 | 330 | 255 | | 182 |
| **64-30-2** | 836 | 1336 | 330 | 255 | | 196 |
| **64-30-1** | 836 | 1336 | 330 | 255 | | 197 |
| **64-30** | 836 | 1386 | 330 | 255 | | 221 |
| **65-40-2** | 919 | 1469 | 330 | 255 | | 225 |
| **64-40-1** | 919 | 1494 | 360 | 285 | | 258 |
| **64-40** | 919 | 1494 | 360 | 285 | | 258 |
| **64-50-2** | 1001 | 1651 | 400 | 310 | | 319 |
| **64-50-1** | 1001 | 1651 | 400 | 310 | | 319 |
| **64-50** | 1001 | 1651 | 400 | 310 | | 320 |
| **64-60-2** | 1084 | 1734 | 400 | 310 | | 325 |
| **64-60-1** | 1084 | 1734 | 400 | 310 | | 349 |
| **64-60** | 1084 | 1734 | 400 | 310 | | 349 |
| **64-70-2** | 1166 | 1816 | 400 | 310 | | 353 |
| **64-70-1** | 1166 | 1816 | 400 | 310 | | 353 |
| **64-70** | 1166 | 1851 | 460 | 340 | | 420 |
| **64-80-2** | 1248 | 1933 | 460 | 340 | | 424 |
| **64-80-1** | 1248 | 1933 | 460 | 340 | | 424 |
| **90-10-1** | 571 | 961 | 260 | 208 | DN=100<br>a=140<br>b=199<br>c=255<br>d=380<br>e=45<br>f=280<br>g=348<br>h=14<br>j=140<br>k=380<br>m=100<br>n=8<br>r=180<br>s=18<br>t=220<br>w=150 | 105 |
| **90-10** | 571 | 961 | 260 | 208 | | 110 |
| **90-20-2** | 773 | 1273 | 330 | 255 | | 181 |
| **90-20** | 773 | 1273 | 330 | 255 | | 192 |
| **90-30-2** | 865 | 1415 | 330 | 255 | | 215 |
| **90-30** | 865 | 1440 | 360 | 285 | | 252 |
| **90-40-2** | 957 | 1607 | 400 | 310 | | 312 |
| **90-40** | 957 | 1607 | 400 | 310 | | 312 |
| **90-50-2** | 1049 | 1699 | 400 | 310 | | 336 |
| **90-50** | 1049 | 1699 | 400 | 310 | | 336 |
| **90-60-2** | 1141 | 1826 | 460 | 340 | | 407 |
| **90-60** | 1141 | 1826 | 460 | 340 | | 407 |

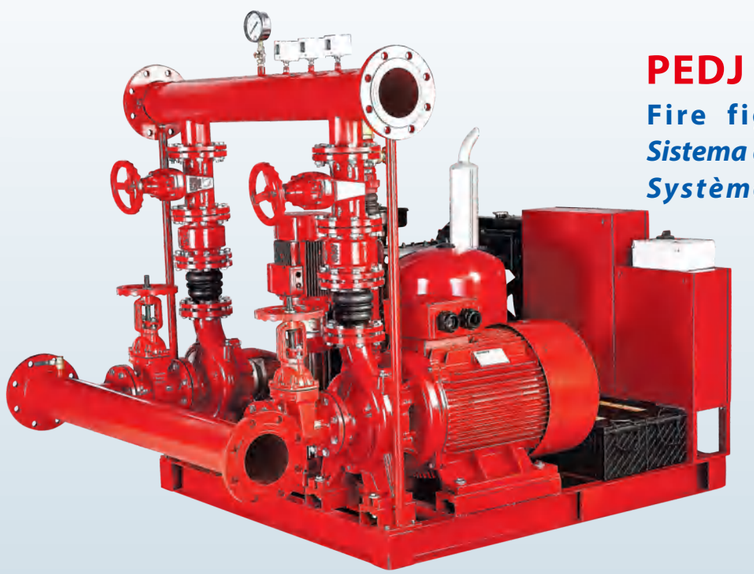

Clean Civil Industry Fire

# PEDJ

## Fire fighting system
## *Sistema de contra incendio*
## *Système anti-incendie*

## NEW/*NUEVO/NOUVEAU*

### DESCRIPTION/*DESCRIPCIONES/DESCRIPTION*

- Fire pumps are designed for whole operational life,the maximum reliability is always the first priority
- The components affixed onto a steel framing structure
- Each controller has its own individual pressure sensing line
- The suction line should never include a strainer
- Check valve and butterfly valve in the discharge line
- NFPA 20 not allows suction from negative level for end suction and split case pumps

- *Bombas contra incendios están diseñadas para vida operativa completa, la máxima fiabilidad es siempre primera prioridad*
- *Los componentes se fijarán en una estructura armazón de acero*
- *Cada controlador tendrá su propia línea detección presión*
- *La línea de succión nunca debe incluir un filtro*
- *Válvula de retención y mariposa en la línea de descarga*
- *NFPA 20 no permite la succión desde el nivel negativo para la succión final y las bombas de carcasa dividida*

- *Pompes à incendie sont conçues pour toute la durée de vie opérationnelle, la fiabilité maximale est toujours la première priorité*
- *Tous les composants fixés sur une structure charpente en acier*
- *Chaque contrôleur possède sa propre ligne détection pression*
- *La conduite d'aspiration ne doit jamais comprendre de crépine*
- *Clapet anti-retour et papillon dans la conduite de refoulement*
- *NFPA 20 n'autorise pas l'aspiration à partir du niveau négatif pour les pompes à aspiration d'extrémité et à boîtier divisé*

### PRINCIPLE/*PRINCIPIO/PRINCIPE*

When pressure drops below the set value, jockey starts running with the signal from the pressure switch and continues running for 10 minutes till the system pressure reaches the set value. If the pressure continues drop, first the main pump starts to run. If the system pressure can't supply and pressure continues drop,the standby pump starts to run.

*Cuando la presión cae por debajo del valor, jockey comienza a funcionar con la señal del interruptor de presión y continúa funcionando durante 10 minutos hasta que la presión del sistema alcanza el valor establecido.Si la presión continúa bajando, primero la bomba principal comienza a funcionar. Si la presión del sistema no puede suministrar y la presión continúa bajando, la bomba de reserva comienza a funcionar.*

*Lorsque la pression chute en dessous de la valeur, jockey commence à fonctionner avec le signal du pressostat et continue de fonctionner pendant 10 minutes jusqu'à ce que la pression du système atteigne la valeur définie.Si la pression continue de chuter, la pompe principale commence d'abord à fonctionner. Si la pression du système ne peut pas fournir et que la pression continue de chuter, la pompe de secours commence à fonctionner.*

### MODEL CODE/*CÓDIGO MODELO/CODE MODÈLE*

For example/*Por ejemplo/Par exemple*

**PEDJ 500 / 8 - 50 - 58 - 5.5**

- **5.5**=Jockey rated power(hp)
  *Potencia nominal jockey(hp)*
  *Puissance nominale jockey (hp)*
- **58**=Diesel rated power(hp)
  *Potencia nominal diésel(hp)*
  *Puissance nominale diesel (hp)*
- **50**=Electric rated power(hp)
  *Potencia nominal eléctrica(hp)*
  *Puissance nominale électrique (hp)*
- **8**=Nominal pressure(Bar=10m)
  *Presión nominal(Bar)/Pression nominale (Bar)*
- **500**=Nominal flow(GPM)
  *Caudal nominal(GPM)/Débit nominal (GPM)*
- Pump type/*Tipo de bomba/Type de pompe*
  **E**=Electric driven pump/*Bomba eléctrico/Pompe électrique*
  **D**=Diesel driven pump/*Bomba diesel/Pompe diesel*
  **J** =Jockey pump/*Bomba Jockey/Pompe Jockey*



## NFPA 20 FIRE PUMP VERSIONS/*VERSIONES DE LA BOMBA CONTRA INCENDIOS NFPA 20/VERSIONS DE POMPE À INCENDIE NFPA 20*

| DESCRIPTION/*DESCRIPCION/DESCRIPTION* | PHOTO/FOTO/PHOTO |
|---|---|
| **PEDJ Version:** Fire pump set consists of **Electric** pump+**Diesel** pump+**Jockey** pump and all accessories<br>***Versión PEDJ:*** *Consiste en una bomba eléctrica + bomba diesel + bomba Jockey y todos los accesorios*<br>***Version PEDJ:*** *L'ensemble de pompe à incendie comprend pompe électrique +pompe diesel +pompe Jockey et tous les accessoires* | |
| **PDJ Version:** Fire pump set consists of **Diesel** pump+**Jockey** pump and all accessories<br>***Versión PDJ:*** *Consiste en una bomba Diesel + bomba Jockey y todos los accesorios.*<br>***Version PDJ:*** *L'ensemble de pompe à incendie comprend pompe diesel + pompe Jockey et tous les accessoires.* | |
| **PEJ Version:** Fire pump set consists of **Electric** pump+**Jockey** pump and all accessories<br>***Versión PEJ:*** *Consiste en una bomba eléctrica + bomba Jockey y todos los accesorios*<br>***Version PEJ:*** *L'ensemble de pompe à incendie comprend pompe électrique +pompe Jockey et tous les accessoires* | |
| **PEEJ Version:** Fire pump set consists of **Electric** pump+**Electric** pump+**Jockey** pump and all accessories<br>***Versión PEEJ:*** *Consiste en una bomba eléctrica + bomba eléctrica + bomba Jockey y todos los accesorios*<br>***Version PEEJ:*** *L'ensemble de pompe à incendie comprend pompe électrique +pompe électrique + pompe Jockey et tous les accessoires* | |